Generator Controller
Item Code: GC-3

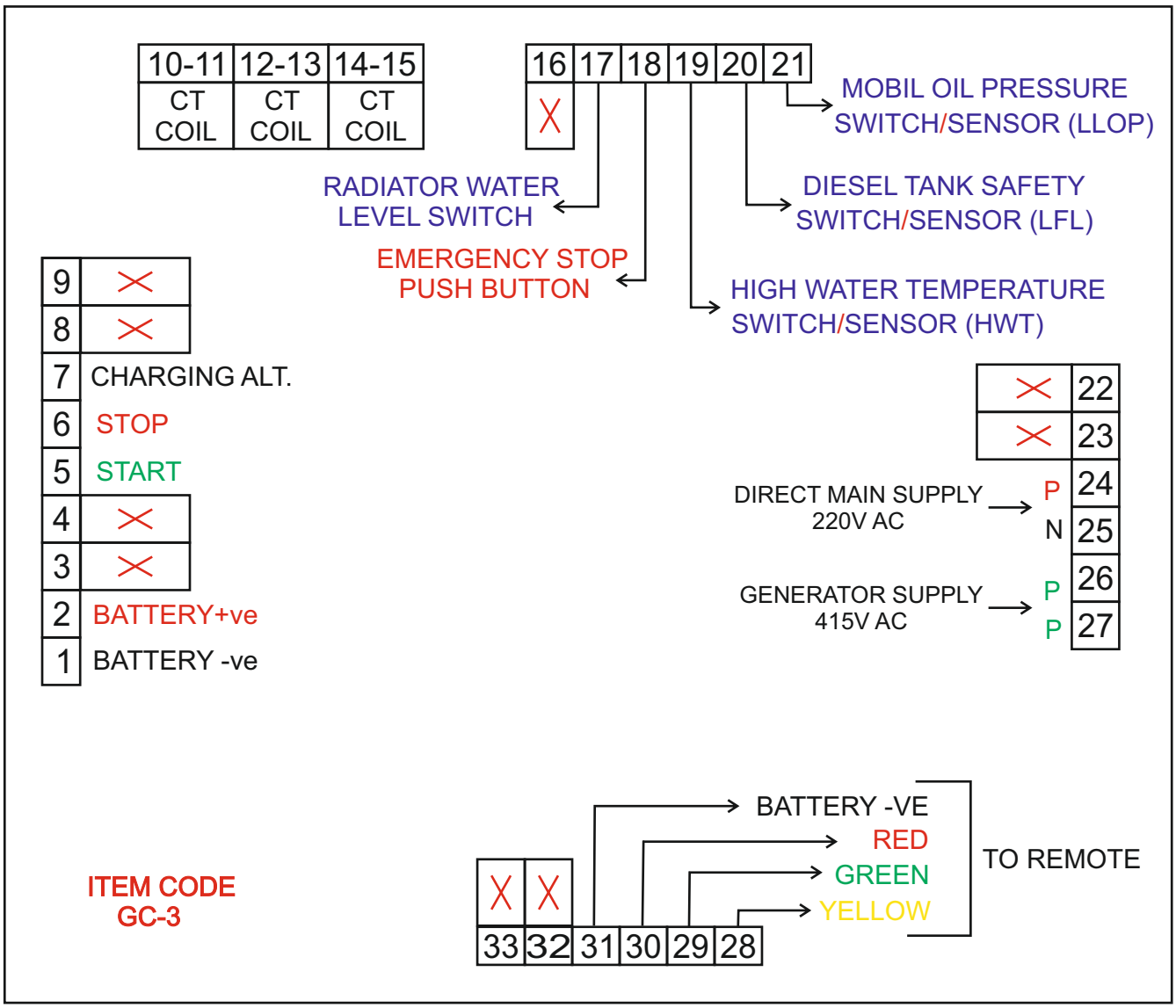

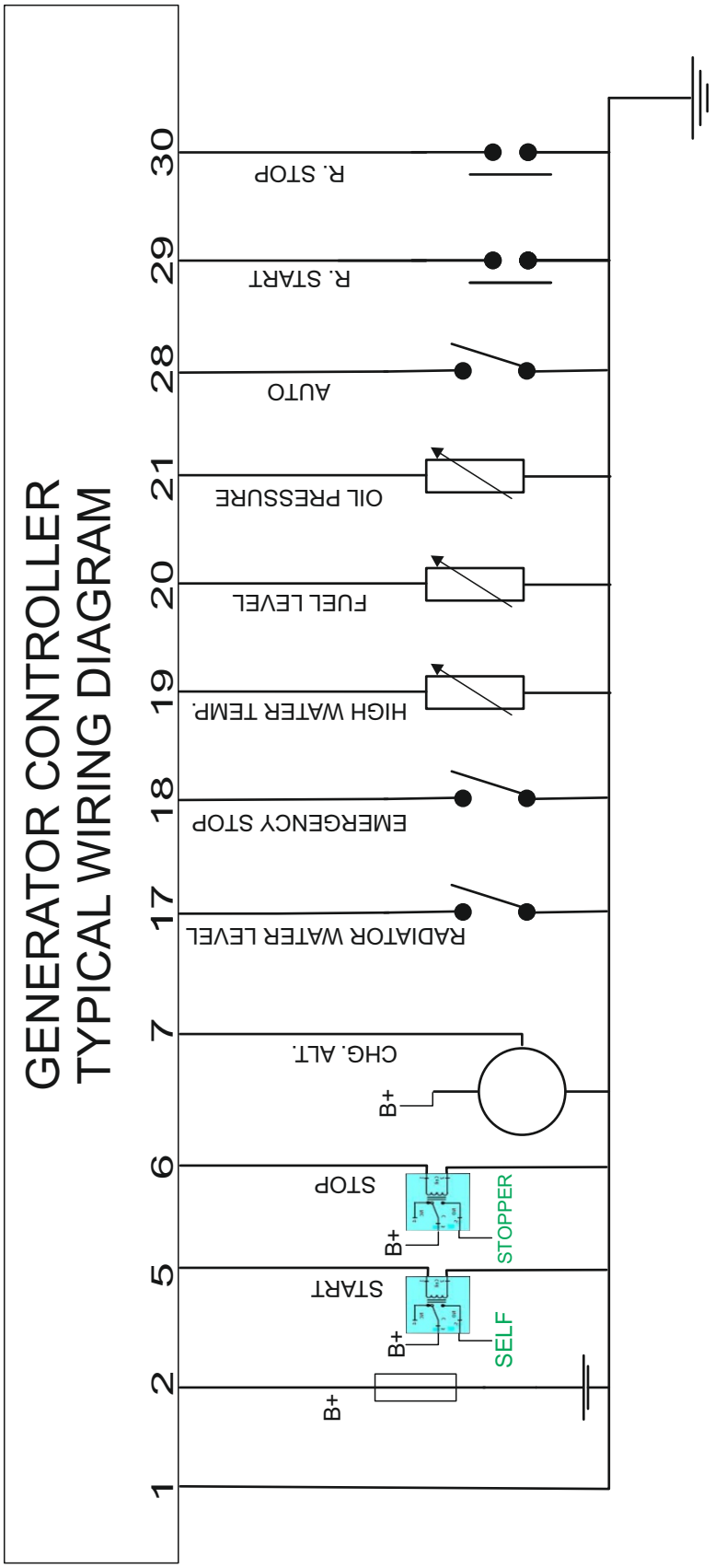
GENERATOR CONTROLLER
TYPICAL WIRING DIAGRAM
1
2
5
6
7
17
18
19
20
21
28
29
30
B+
START
B+
SELF
STOP
B+
STOPPER
B+
CHG. ALT.
RADIATOR WATER LEVEL
EMERGENCY STOP
HIGH WATER TEMP.
FUEL LEVEL
OIL PRESSURE
AUTO
R. START
R. STOP